CPC-Cryolab
PART OF OPW a DOVER company

MINI-CRYOGENIC VACUUM JACKETED VALVES

CV9 CRYO SERIES

0 to 200 PSIG

Valve Size:
Available in 3/4" F to 1" F

APPLICATIONS

- Helium Siphons
- Point of Use Valve
- Laboratory Usage

FEATURES

- Vacuum Jacketed (Insulated with Four Layers of Radiation Shielding)
- Bubble Tight Shut-Off
- High Thermal Efficiency
- Compact Size
- Economical
- Convoluted Bellows Stem
- O-ring Spring Loaded Packing Assembly
- Non-galling Brass Metering Handle
- Easy In-line Maintenance
- Socket Weld Ends
- Dynamic Loaded Packing

OPTIONS

- Cold Box Cuff
- Pneumatic Actuators
- Positioners
- Linear & Equal % Flow Plugs

OPERATING RANGES

Temperature..... -423° F to +400° F

Max. Operating Pressure 400 PSIG

TECHNICAL DATA

Materials of Construction:
All Major Structural Components are 300 Series Stainless Steel

Packing	Viton® O-rings
Seat Seal	Kel-F
Stem	Stainless Steel Bellows

Testing:

Proof Pressure	225 PSIG
Seat Leakage	Bubble Tight to 150 PSIG
External Leakage	Mass spec. to $1x10^{-9}$scc GHe/sec

CV9 SERIES

ORDERING GUIDE

CV9 - 084 - C WTR - M - NJ

MODEL NUMBER
CV9 Series

SIZE
084 - 1/2"

CLEANING
O - Oxygen (per 216-2 specification)
C - Standard

CONFIGURATION
WTR - Tube Size, 90 Angle Pattern
WTG - Tube Size, Globe
WTY - Tube Size, Y Pattern (Bar Stock Body, 1/4" tube only)

TOP WORKS
M - Manual
A - Automatic Valve without Actuator
B - Automatic Valve with AutoSeal
E - Automatic Valve with AutoSeal and Control Tip - EQ%; specify Actuator
L - Automatic Valve with AutoSeal and Control Tip - Linear; specify Actuator

SPECIAL ADD ONS
NJ - Non-Jacketed
CB - Cold Box Cuff
TW - Top Works Kit Only w/ Stem & Seals

DIMENSIONS & CHARACTERISTICS

Globe Pattern

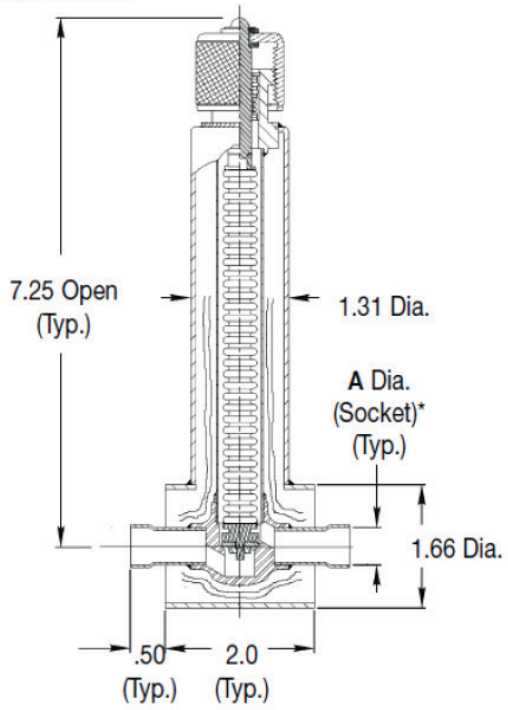

TUBE SIZE	WT.	CV.	A DIA. (SOCKET)
1/4"	12 oz.	.7	.255*
3/8"	12 oz.	1.8	.380*
1/2"	12 oz.	2.3	.505

Angle Pattern

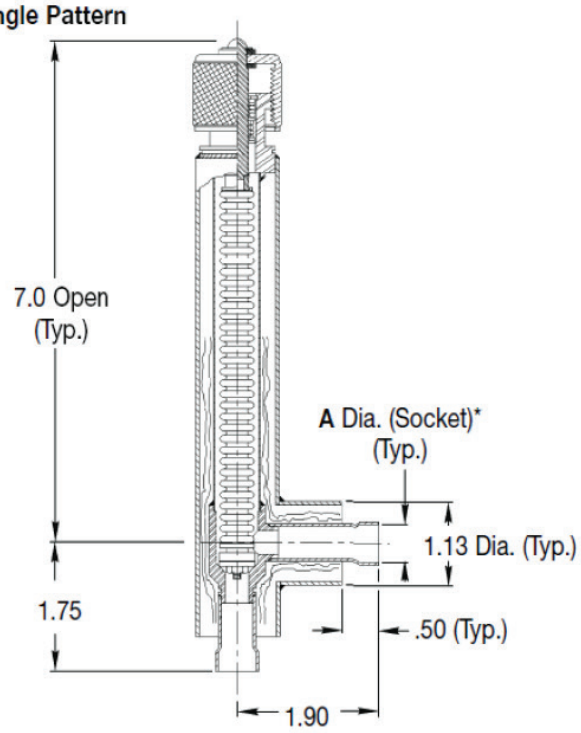

TUBE SIZE	WT.	CV.	A DIA. (SOCKET)
1/4"	12 oz.	.7	.255*
3/8"	12 oz.	1.6	.380*
1/2"	12 oz.	1.6	.505

*Adapters supplied for 1/4" & 3/8" sizes